Current part is item (5) on diagram. Available at www.oshkoshequipment.com

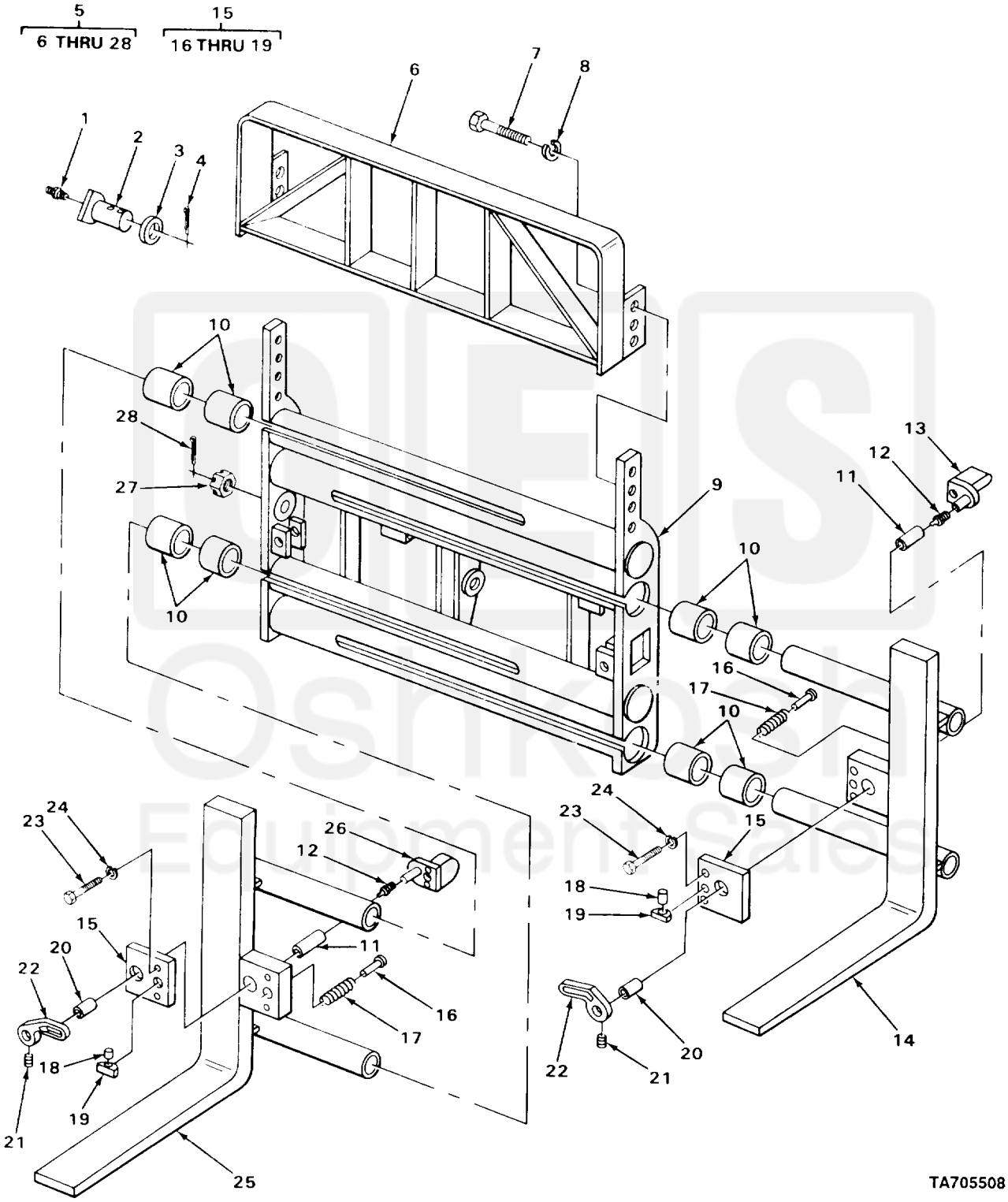

FIGURE 182. LIFT FORK AND CARRIAGE.

Current part is item (5) on diagram. Available at www.oshkoshequipment.com

Current part is item (5) on diagram. Available at www.oshkoshequipment.com

(1) ITEM NO	(2) SMR CODE	(3) CAGEC	(4) PART NUMBER	(5) DESCRIPTION AND USABLE ON CODES (UOC)	(6) QTY
				GROUP 2405 MAST COLUMN	
				FIG. 182 LIFT FORK AND CARRIAGE	
1	PFOZZ	96906	MS15003-1	FITTING,LUBRICATION TILT CYLINER PIN	1
2	XDOZZ	04285	W69061	PIN ASSEMBLY TILT CYLINDER MTG	1
3	PFOZZ	96906	MS27183-32	WASHER,FLAT TILT CYLINDER MTG	1
4	PFOZZ	96906	MS24665-627	PIN,COTTER TILT CYLINDER PIN	1
5	XDOFF	04285	A69252	CARRIAGE ASSEMBLY FORKS UOC:CQK,U72	1
5	XDOFF	02614	5C622250	CARRIAGE ASSEMBLY FORKS UOC:CMP,CMQ,U73,U74	1
6	PFOZZ	02614	4C622363	.BACK REST,CARRIAGE	1
7	PFOZZ	96906	MS90727-187	.SCREW,CAP,HEXAGON H BACK REST MTG UOC:CQK,U72	4
7	XDOZZ	02614	1C622257	.SCREW,CAP BACKREST MTG UOC:CMP,CMQ,U73,U74	4
8	PFOZZ	96906	MS35338-51	.WASHER,LOCK BACK REST MTG UOC:CQK,U72	4
8	XDOZZ	02614	2C6294	.WASHER,LOCK BACKREST MTG UOC:CMP,CMQ,U73,U74	4
9	XBOZZ	04285	W69254	.FRAME,CARRIAGE UOC:CQK,U72	1
9	PFOZZ	02614	5C622338	.FRAME,CARRIAGE UOC:CMP,CMQ,U73,U74	1
10	PAOZZ	25705	21065	.BUSHING,SLEEVE	8
11	PFOZZ	96906	MS17795-176	.BEARING,SLEEVE LATCH ASSEMBLY	2
12	PFOZZ	96906	MS15003-1	.FITTING,LUBRICATION LATCH ASSEMBLY	2
13	PAOZZ	97403	13212E4504	.LATCH ASSEMBLY LEFT LH FORK UOC:CQK,U72	1
13	PAOZZ	03677	LT1-1921	.LATCH ASSEMBLY LEFT LH FORK UOC:CMP,CMQ,U73,U74	1
14	XDOZZ	04285	W67911	.ARM ASSEMBLY CARRIAGE LH UOC:CQK,U72	1
14	PAOZZ	02614	5C622358	.ARM CARRIER LH UOC:CMP,CMQ,U73,U74	1
15	PFOZZ	04285	A69276	.LOCK ASSEMBLY,LATCH	2
16	PAOZZ	02614	1C614020	..PIN,SPECIAL LATCH	2
17	PAOZZ	02614	1C614019	..SPRING,SPECIAL LATCH	2
18	PFOZZ	02614	H32C8006	..RIVET,SOLID	2
19	PAOZZ	02614	1C613998	..HANDLE,SPECIAL	2
20	XDOZZ	04285	P67758	.BEARING,THRUST LATCH MTG UOC:CQK,U72	2
20	PAOZZ	02614	1C622255	.BEARING,WASHER,THRU LATCH MTG UOC:CMP,CMQ,U73,U74	2
21	XDOZZ	04285	6	.SETSCREW HANDLE MTG UOC:CQK,U72	2
21	XDOZZ	02614	1C617668	.SETSCREW HANDLE MTG UOC:CMP,CMQ,U73,U74	2
22	PFOZZ	97403	13212E4500	.HANDLE,DOOR	2
23	PFOZZ	96906	MS18154-58	.SCREW,CAP,HEXAGON H LOCK ASSEMBLY	4

Current part is item (5) on diagram. Available at www.oshkoshequipment.com